CONSTRUCTION:

BOLT TOGETHER ASSEMBLY
SHIPS UNASSAMBLED AS FLAT KIT
#12 GA. C.R.S. VERTICAL RAIL CHANNELS
#11 GA. C.R.S. BOTTOM HORIZONTAL SUPPORT FEET
#14 GA. C.R.S. TOP HORIZONTAL SUPPORT

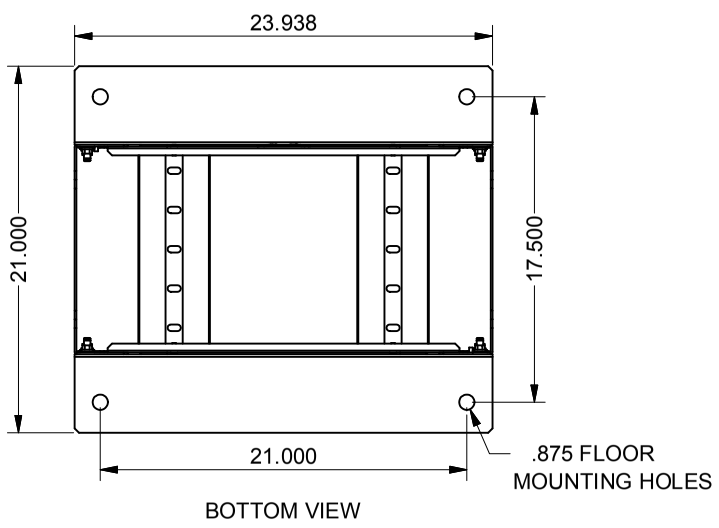

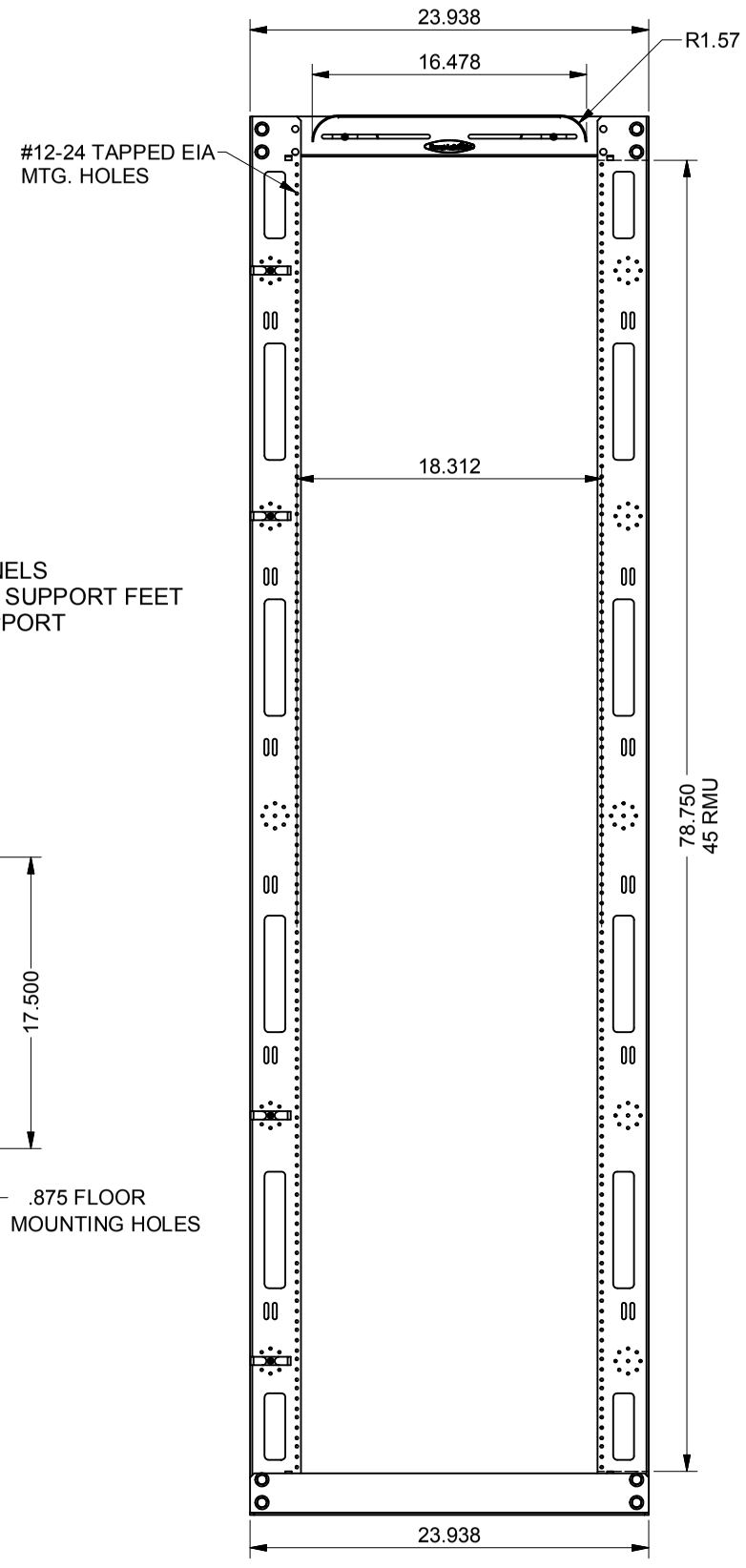

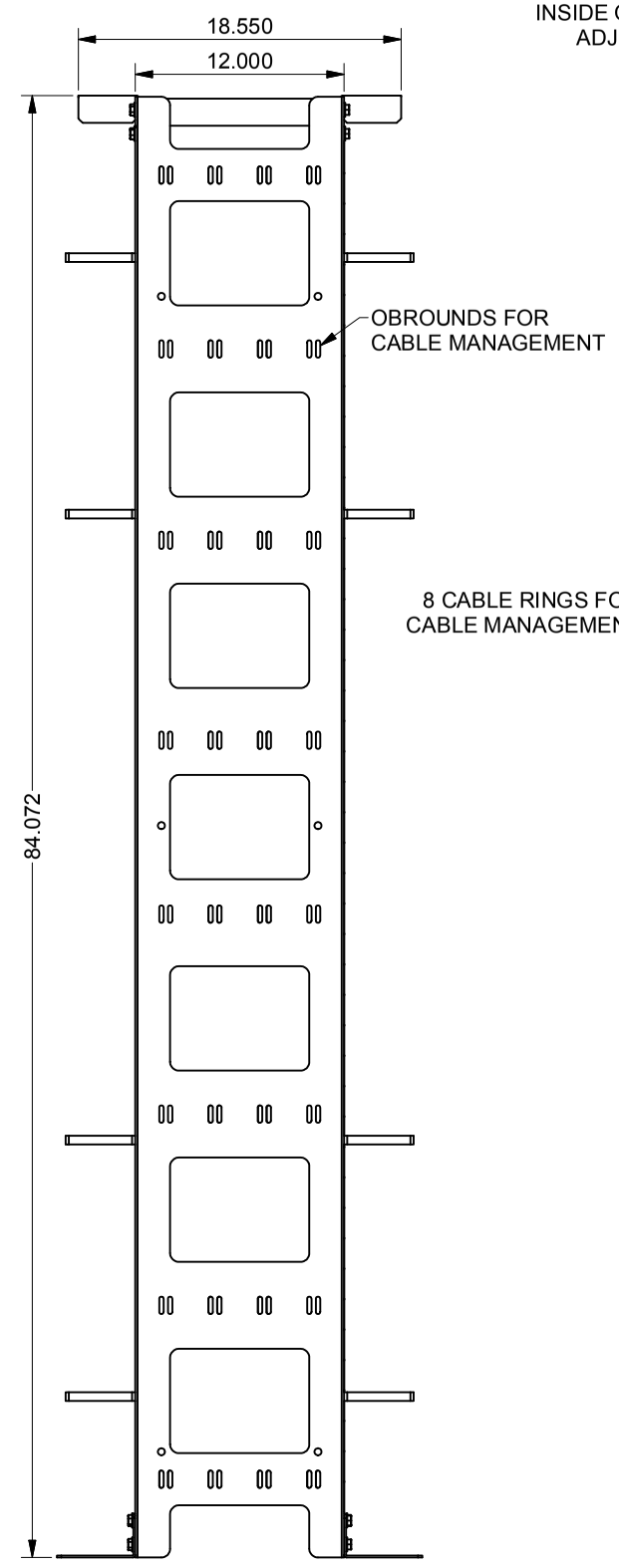

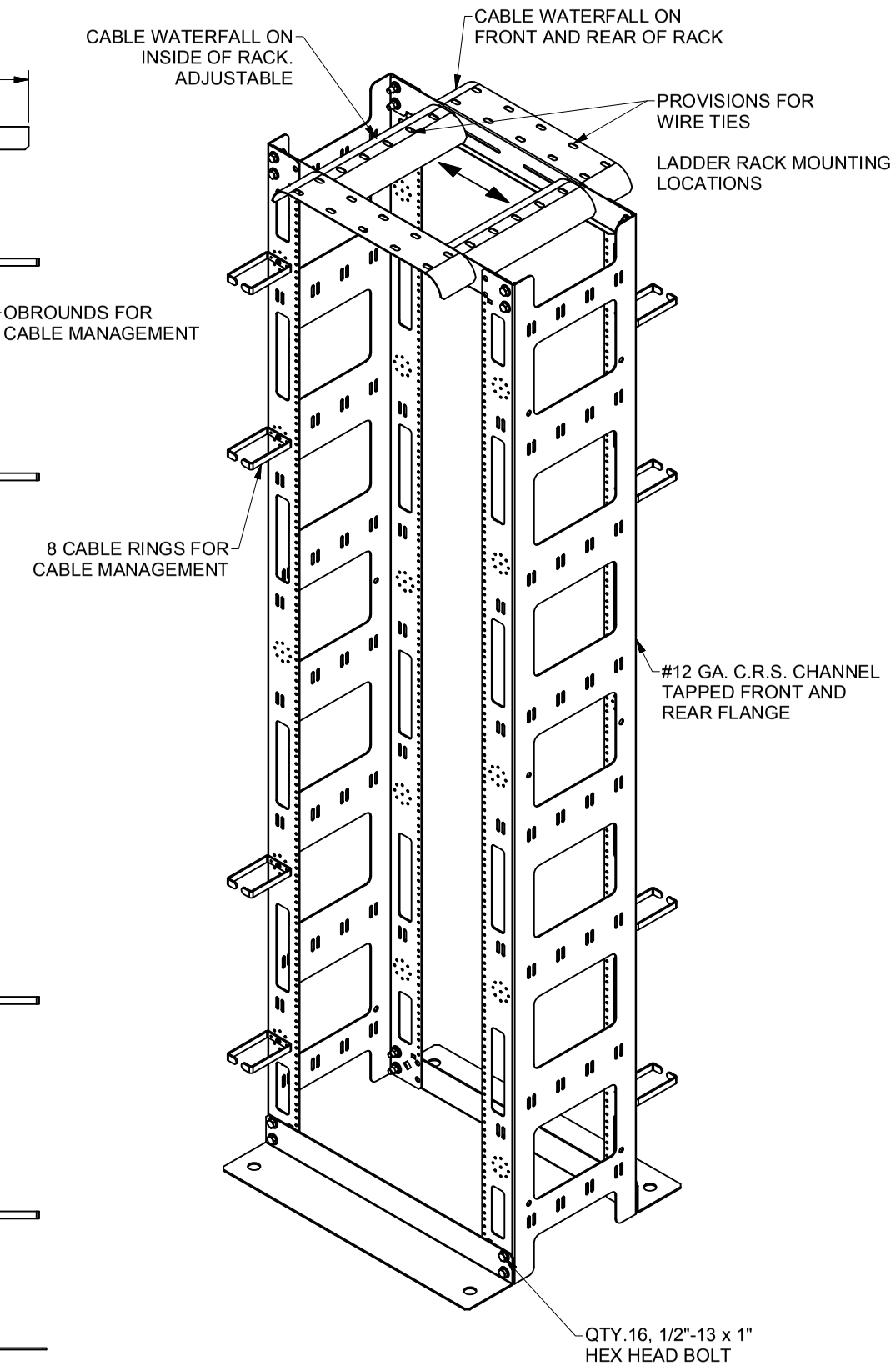

INTERPRET DRAWING PER ASME Y14.5M-1994	NOTICE:	PART NUMBER:	TITLE CABLE MANAGEMENT RACK
DIMENSIONAL LIMITS APPLY AFTER APPLICATION OF FINISH	Use of this document is subject to a confidentiality and nondisclosure agreement with Great Lakes Case & Cabinet Co., Inc. (GLCC) and may not be reproduced, disclosed or utilized in whole or in part without prior written authorization from GLCC.	QTY PER UNIT: 1	
DRAWING NOT TO SCALE		MATERIAL TYPE: -	GREAT LAKES CASE & CABINET CO., INC. P.O. BOX 551 EDINBORO, PA 16412 PHONE (814) 734-7303 FAX (814) 734-3907 E-MAIL glcc@greatcabinets.com
TOLERANCE UNLESS OTHERWISE NOTED: ANGULAR +/- 1 .XXXX +/- .010 .XXX +/- .015 .XX +/- .030 .X FOR REF. ONLY		MATERIAL GAUGE: -	
		FINISH: SEE NOTES	
THIRD ANGLE PROJECTION		DRAWN MZ DATE 1/11/2011	DWG NO: I013250 REV 0 SHEET: 1 OF 1
UNLESS OTHERWISE SPECIFIED ALL DIMENSIONS ARE IN INCHES		CHECKED & APP. WSS DATE 1/11/2011	